Langsamläufer Generator 1000 Watt LLG1000

Rated Power (W)	1000
Rated Voltage (V)	DC56
Rated Current(A)	17.9
Rated Speed• RPM• •	360
Start Torque• N*M• •	<1.2
Efficiency	80%
Weight	25KG

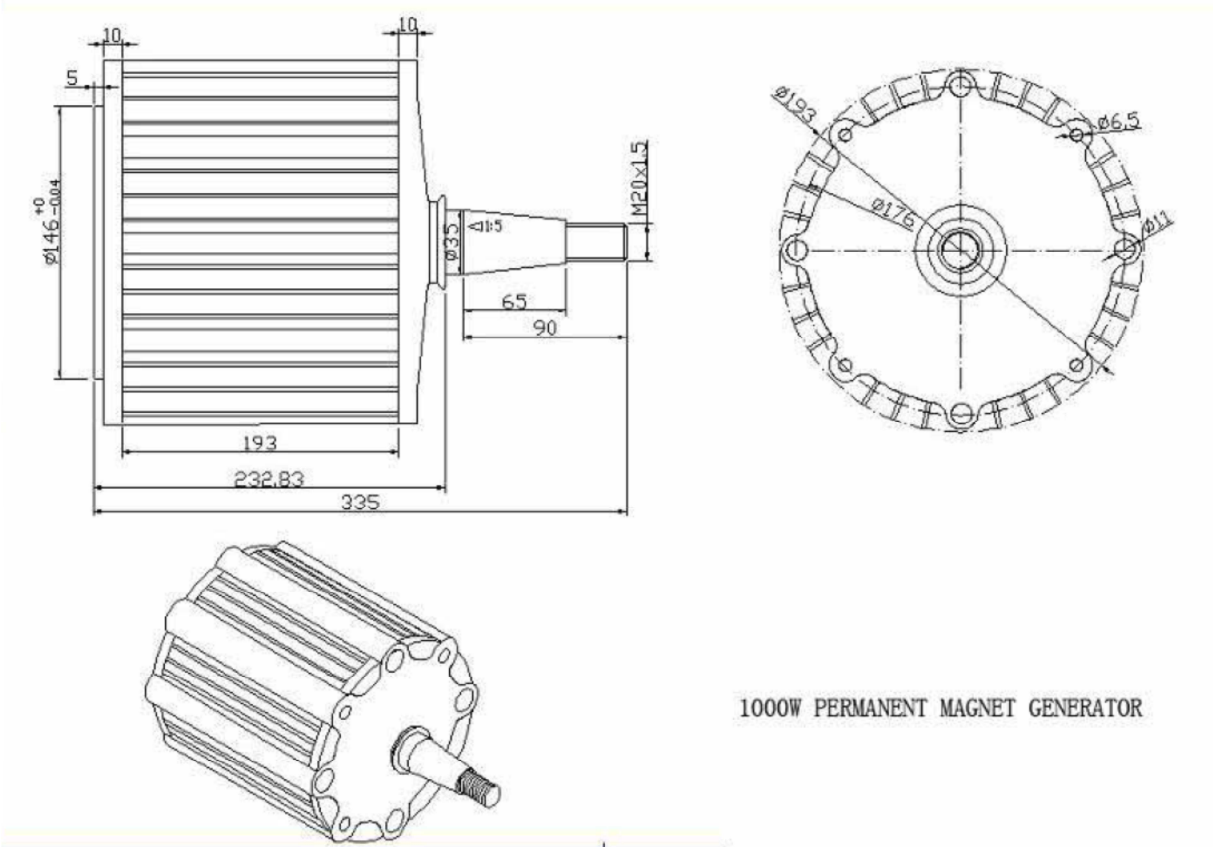

1000W Permanent Magnet Generator Test Report
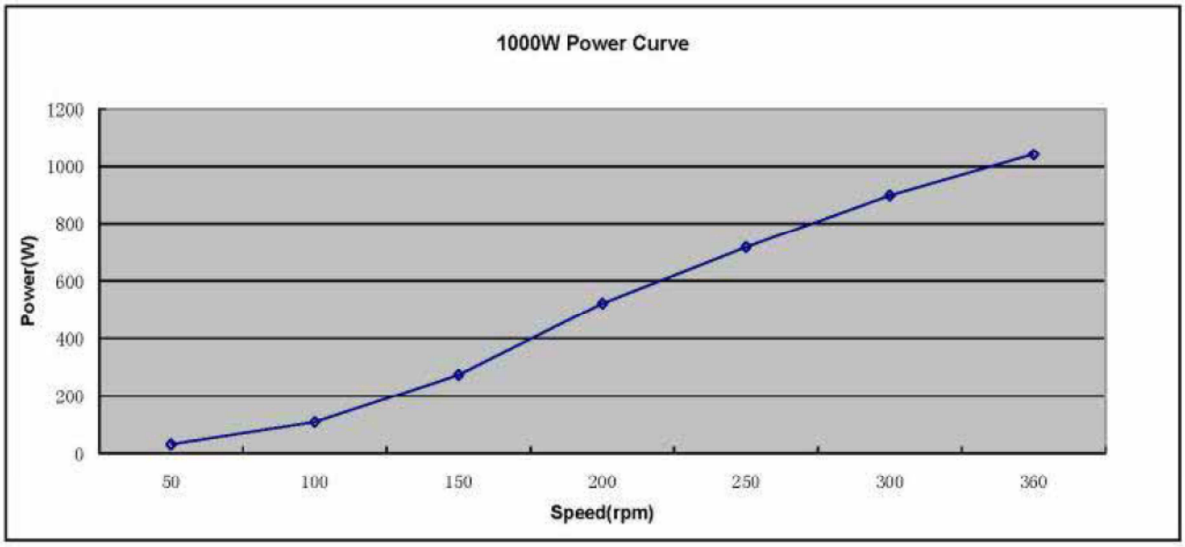
	Design	Test process							
Speed(rpm)	**360*0.65**	234	50	100	150	200	250	300	360
No load Test									
No load DC voltage(V)	**>=56**	58							
Load Test									
DC Voltage(V)	**56**		5.8	16	28	36	44	51	57.6
DC Current(A)	**17.9**		5.3	6.8	9.8	14.5	16.3	17.6	18.1
Power (W)	**1000**		31	109	274	522	717	898	1043